1/12 T4 MONACO WING SET

chevron models

＊1204（1／12 T4モナコウイングセット）

◆ The following are needed to assemble this kit
★ Tamiya's 1/12 Ferrari 312T4
★ Various glues (plastic model, CA glue or the like)
★ Paints, tools and items generally used with plastic models
★ Small screwdrivers (for watches)
★ A 1.5mm drill bit / pin vise
★ White, 0.5mm thick plastic card/sheet
★ Some square, 3mm diameter plastic rod

＊ About resin parts

Please paint after washing with a resin cleaner.
Please use cyanoacrylate (CA) glue etc, as plastic model glue will not work on resin.

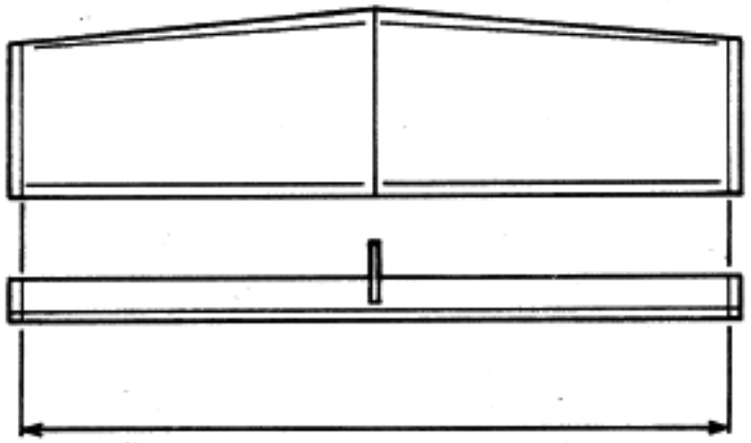

114.5

Cut to 114.5mm to match cowl width

! Warning ! ＊ Please read

★ There are small parts: be careful not to swallow them. Also, be careful that small children do not swallow them.
★ Do not put the bags that the parts are in over your head. Also, tear the bags and dispose of them, so that small children cannot play with or put them over their heads.
★ This product contains parts which may be sharp. Exercise sufficient care as they can easily cut your hands.
★ Be careful so as to not inhale any dust particles etc when sanding, as the product contains some materials which are harmful.
★ No glues or paints are included. Please buy them separately.

＊ Preparing the base kit

The top cowl outlets and cowl-end need to be modified.
Work carefully, using a box-cutter knife and files etc.

★ The dark areas shown need to be cut awav

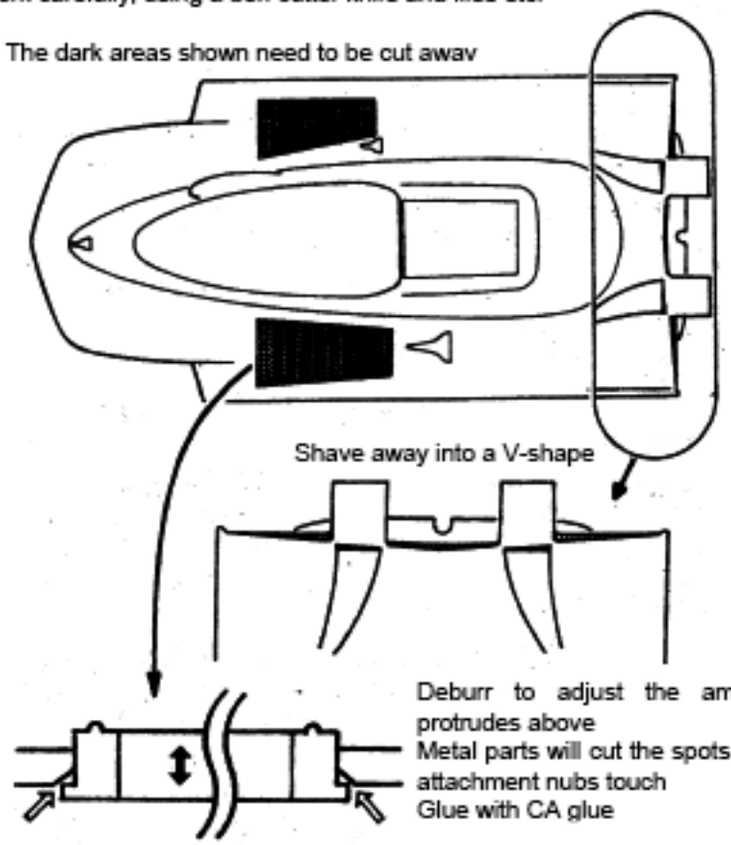

Deburr to adjust the amount that protrudes above
Metal parts will cut the spots where the attachment nubs touch
Glue with CA glue

＊ Cutting out the wind shield

1. Cut out the basic shape with scissors leaving a wide margin.
2. Cut away more in increments with a hobby knife etc, leaving a margin of about 0.5mm all the way around. Do this while frequently holding the vacuum part against the kit cowl to check for proper shape.
3. Finish the edges with sandpaper of about 180 grit.

＊ Painting / Gluing the wind shield

The vacuum formed parts are covered with a layer of silicon based mold remover. And since any static electricity will cause dust particles to cling to them, please be sure to clean off all mold remover with a dish-washing product after finishing with your mock assembly, and allow for ample drying time before painting.

★ Paint from the back side.
First, apply Gunze metal primer to prevent peeling. Then air-brush with clear blue thinned with clear.
＊ For those without an air-brush, mix in a paint drying retarder, and apply carefully so as to leave no brush strokes.
* Please practice your colour mixtures on pieces of excess vacuum molding

Cut down to this line →

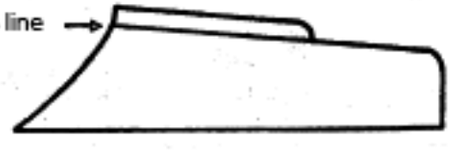

＊ About the metal parts

The surfaces are somewhat rough, so those who want to paint with clear and make use of their natural metallic colour, can smooth them first with sandpaper etc, then polish them with polishing compounds. Please wash with water afterwards, and allow for ample drying time before painting.

＊ Attaching the seat belts

Assemble with reference to the diagram below.
Use the "arexsons" name stickers
Some parts will not be needed.

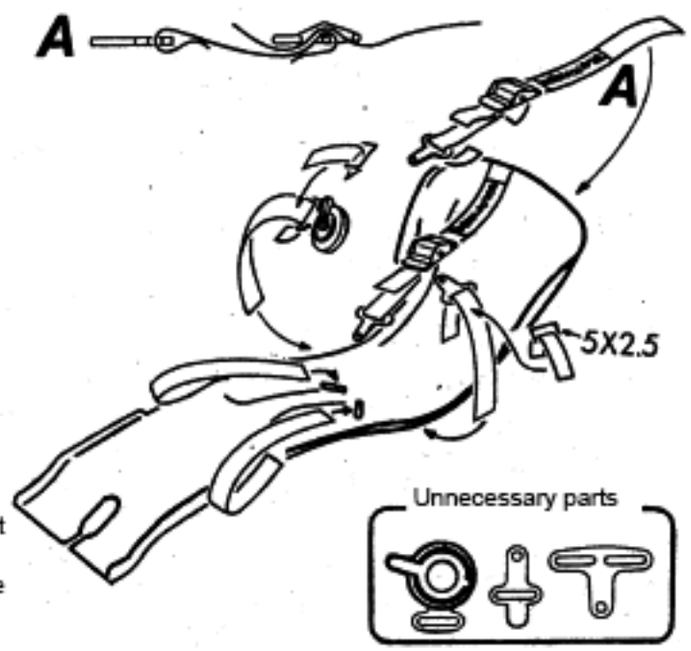

＊ Assembling the rear wing

Assemble with reference to the diagram below.
Attach parts to the transmission case while checking to be sure there is no mis-alignment or twisting
Rear wing beyond B51 is not used

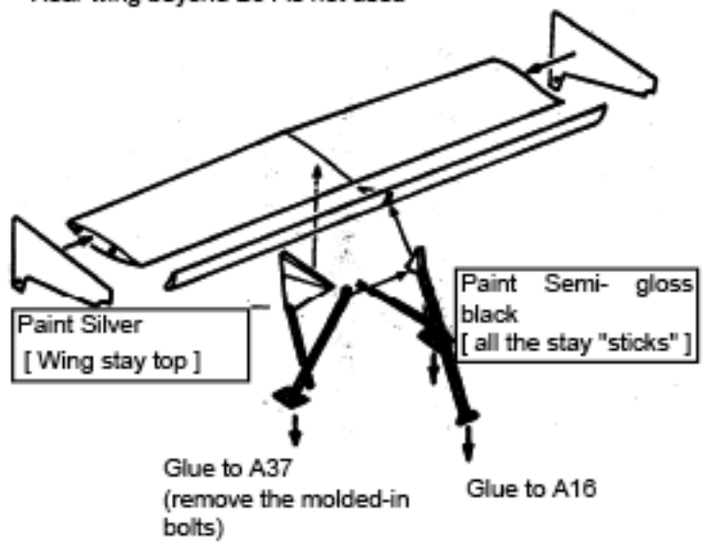

Instructions continue on back side

★ Align the bolt holes in a proper front-to-back, top-to-bottom position, and after drilling 1.5mm holes, insert the 1.6mm pins (do not glue the pins if you want the cowl to be removable)

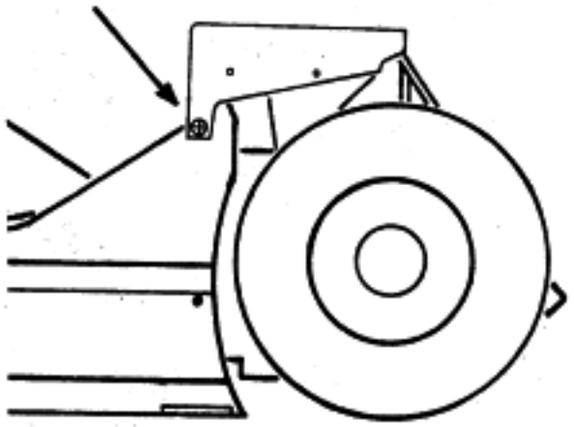

★ To keep the rear and front wings a similar colour, remove the chrome plating from the front wing, and paint with silver. (The chrome will come off by soaking in bleach. There is a film layer under the chrome that can be untidy after sanding away parting lines and sink marks. Using super clear afterwards often helps this. Afterwards, then spray with silver and clear.

* Decals

Cut decal 27 in the middle and apply

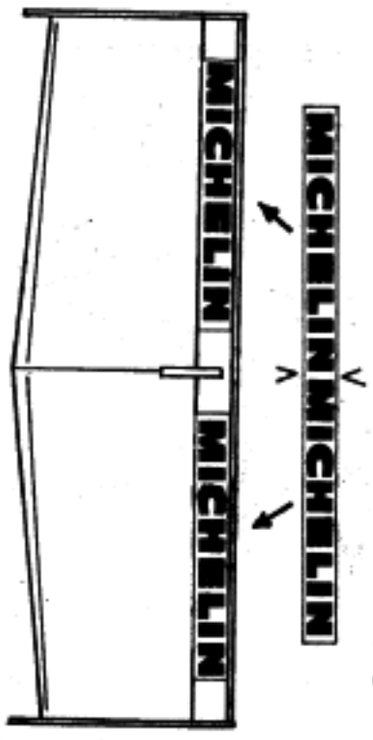

★ This rear wing was used in '79 for:
the West American Long Beach GP
(car #11 only, the winner)
the Monaco GP
(car #11, the winner)
(car #12 retired)
☆ For Long Beach:
the car number appeared only on the right side, not on the wing end plates
use kit decal 13
☆ For Monaco:
the car number appeared on both sides
use kit decal 43
* Strictly speaking, the exhaust pipes wove around in a different way during the first half of the season, but for brevity's sake, this is not explained in these instructions

Cut off the blue lines, and apply

Chevron Models Products

★ 1/12 F-1 Windshield Sets
(2000 yen each, 500 yen postage for any number)
0.3mm vinyl windshield set replacements for Tamiya's 1/12 F-1 series.
No parallax / distortion as seen with thicker parts.
* 9901 for the MP4/6 (2 types), 641/2 (2 types), FW14B
* 9902 for the Honda F1, Tyrrell F1, 312T JPS72D, Gold Leaf 49B
* 9903 for the 312B, 312T4, Yardley M23 BT44B, 49 Ford

★ 1/12 F-1 Seat Belt Sets
(2200 yen each, 250 yen postage for any number)
Can be used with 312B to RE-20 F-1 kits.
Serve as replacements for original parts beyond the 641/2.
All belt names reproduced on cloth stickers.
* 9904 Blue belt set for the JPS72D, BT44B, 312T4 P34, JPS78, WR-1, 312T, RE20
* 9905 Black belt set for the 312B, Tyrrell F-1, Yardley M23, MP4/6
* 9906 Red belt (Sabelt) set for the 641/2, FW14B

★ 1/20 F-1 Windshield Sets
(2000 yen each, 250 yen postage for any number)
Clear windshield sets for Tamiya's 1/20 F-1 series.
Transparent windshields for the BT46 to Lola T93-00
* 9907 for the Ferrari 312T3, F189, McLaren MP4/4, 4/5B, 4/7, 4/8, Ligier JS11, Lotus 102B, Brabham BT46, BT50, Benetton B188, Renault RE30B, Lola T93-00, Williams FW11

★ 1/20 99T Late Version Cowl Set *2001
(3500 yen, 500 yen postage)
Cowling to make a late version car from Tamiya's 1/20 Lotus 99T.
Includes a rear wing and turbo ducts
Comes with a white metal car camera for car #11.

★ 1/12 T2'77 Transkit *1203
(25000 yen, 2000 yen postage)
Kit to convert Tamiya's 1/12 Ferrari 312T into '77 year T2 specs
[advanced users]

★ 1/12 "M"76 Transkit *1205
(18000 yen, 2000 yen postage)
Kit to convert Tamiya's 1/12 Yardley M23 into '76 year specs
Comes with decals for cars No 11 and 12, as well as No 40 for Gilles.
[advanced users]

★ 1/12 Subaru 360' 64 *1201
A big scale kit using vacuum formed parts for the body.
[advanced users] For those who absolutely must have a Subaru 360 in 1/12,
this kit can only be recommended for serious modellers.

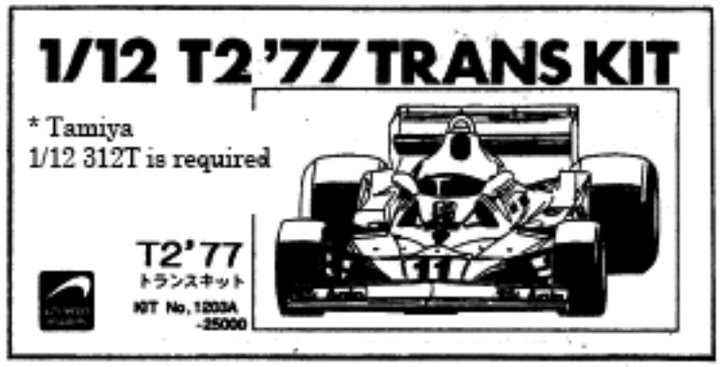

Paper template for rear wing end plates
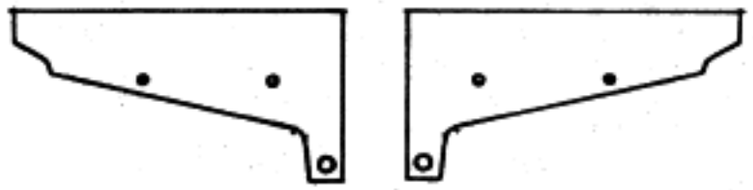
★ Cut from 1.5mm plastic card
(attachment holes 1.5mm diameter)